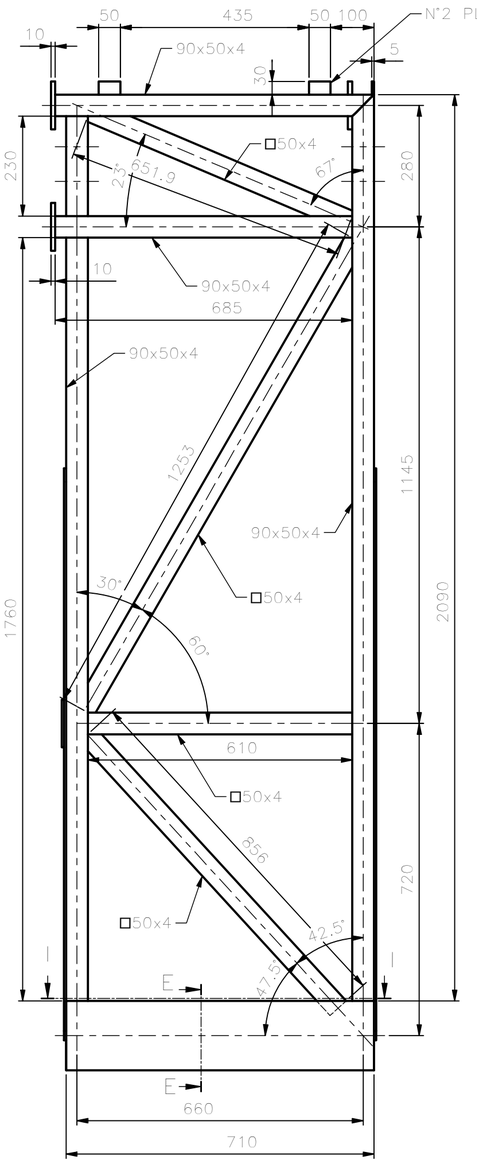

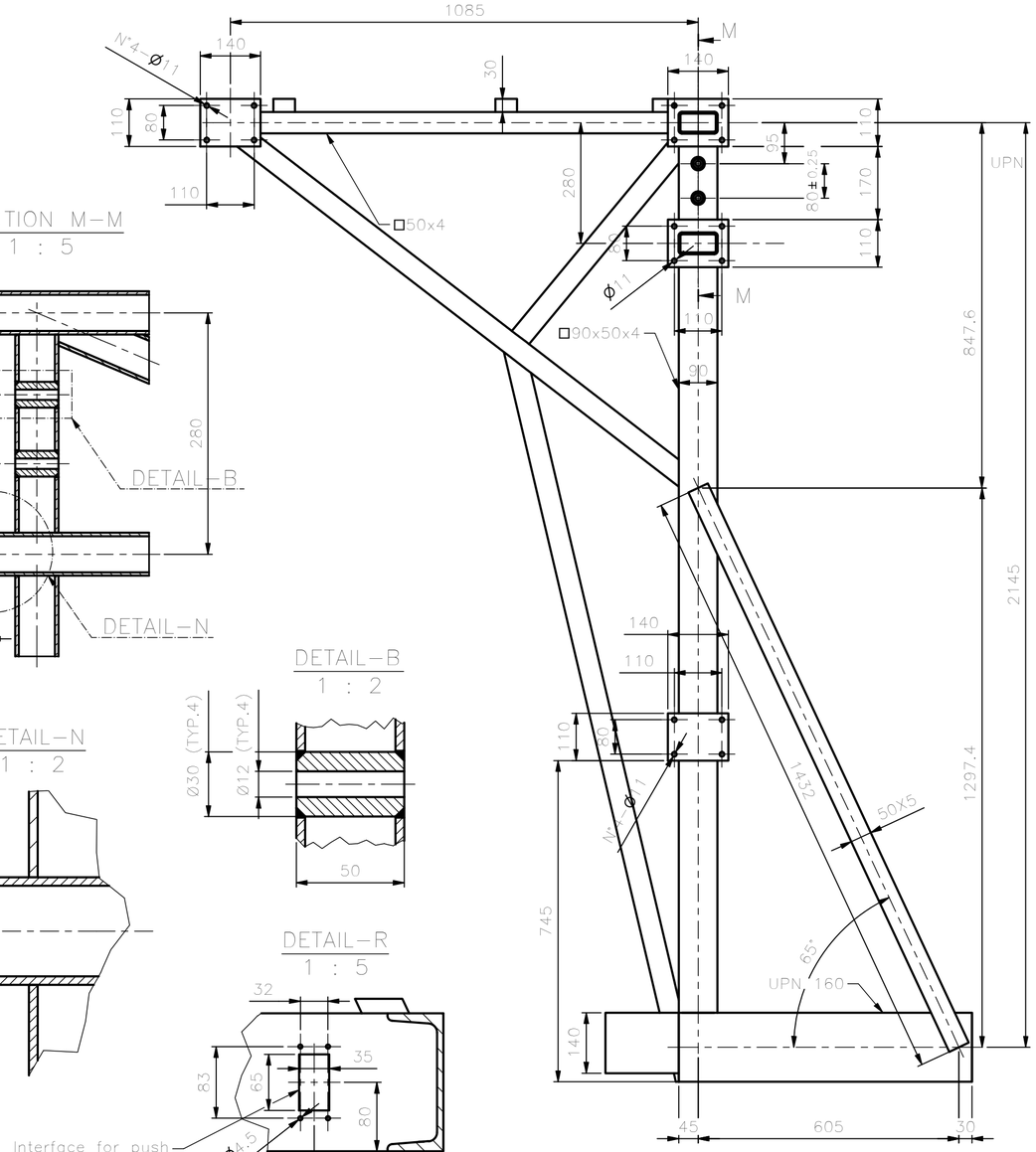

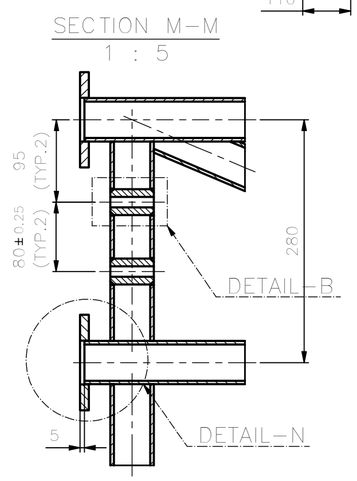

SECTION M-M
1 : 5

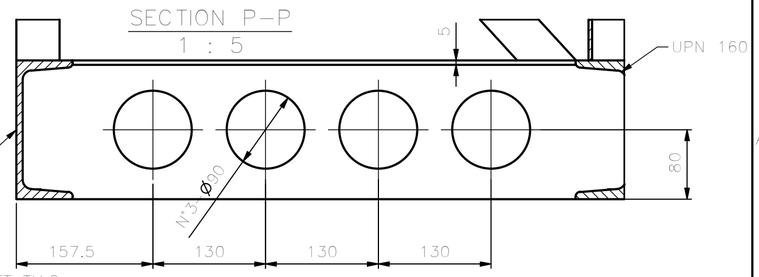

SECTION P-P
1 : 5

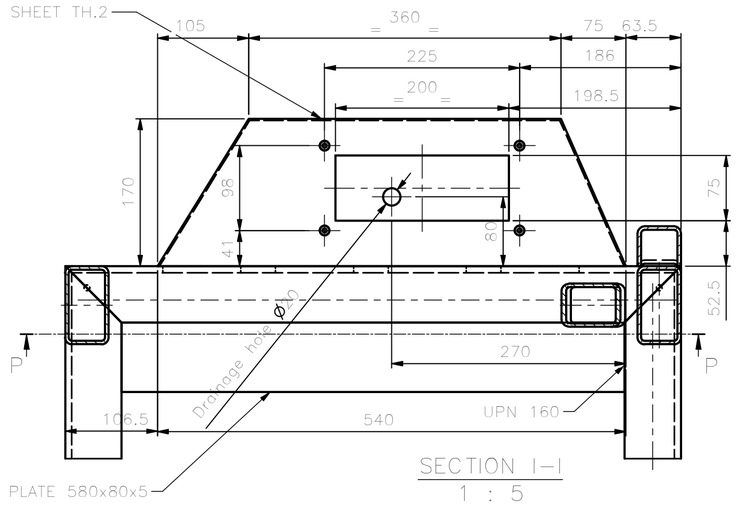

SECTION I-I
1 : 5

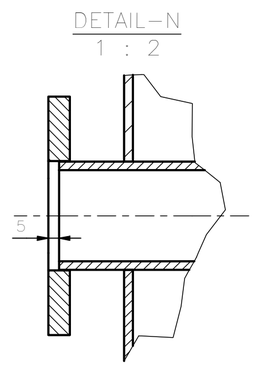

DETAIL-N
1 : 2

DETAIL-B
1 : 2

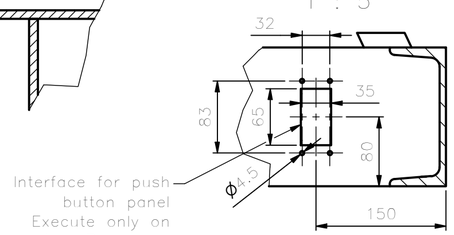

DETAIL-R
1 : 5

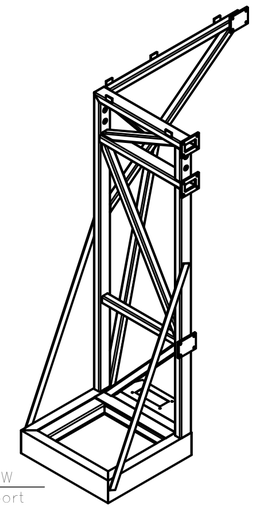

ISOMETRIC VIEW
Cabinet L support
Code number:
7113-110-02-00
Execute opposite hand

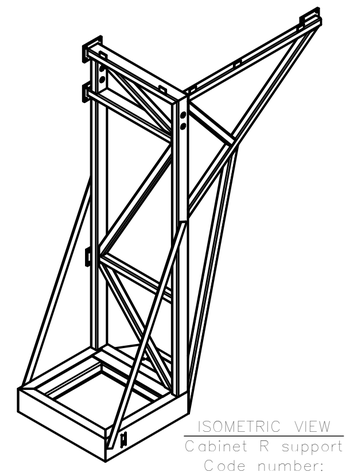

ISOMETRIC VIEW
Cabinet R support
Code number:
7113-110-01-00
Execute as shown

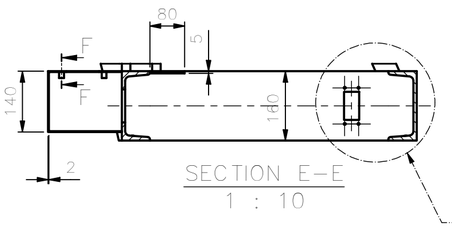

SECTION E-E
1 : 10

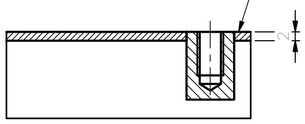

SECTION F-F
1 : 1

DETAIL-R

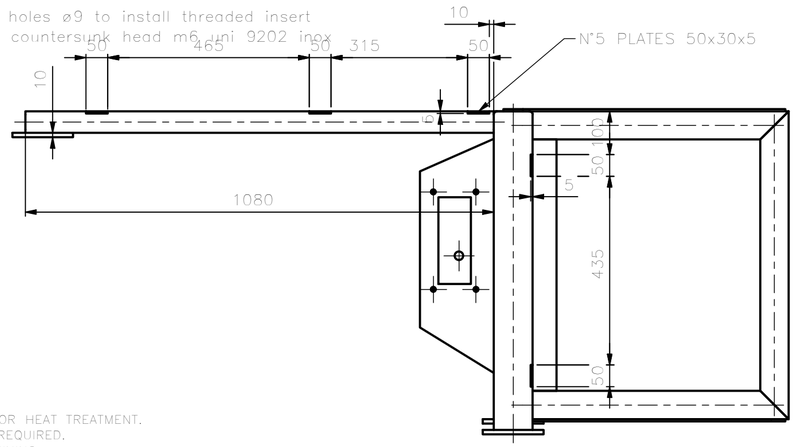

SALDATURE D'ANGOLO TIPICHE
SALVO ECCEZIONI INDICATE
TYPICAL FILLET WELDS
EXCEPT WHERE OTHERWISE NOTED

S1 ≥ S2
H=0.7xS2
SP=0.5xS2

SALDATURE A 1/2 V TIPICHE
GIUNTI A T AD ANGOLO RETTO
TYPICAL 1/2 V WELDS
RIGHT ANGLE T JOINT

α=50°
S=1.5÷2.5mm
g=1÷2
g=1.5÷2.5
g=1.5÷3
g=1.5÷3.5

NOTE:
MACHINING ALLOWANCE SURFACE.
PROVIDE ALL THE CLOSED VOLUMES WITH VENT HOLES FOR HEAT TREATMENT.
DEBURRING OF NOT DIMENSIONED EDGES ARE STRICTLY REQUIRED.
EXECUTE STRESS RELIEF HEAT TREATMENT BEFORE MACHINING.
THE SURFACES NOT MACHINED MUST BE COATED WITH PAINTING TYPE RAL 3016.

EIE GROUP
via Torino 151A - Mestre
Venezia - 30172 - ITALY
tel. +39 041 5317906 - www.eie.it

ASTRI mini-array - CTA Small Size Telescope prototypes

Material:	Surface:	Tolerances according to: ISO 2768/1-m ISO 2768/2-k	Roughness:	Commessa/Job no.: G0113
Status:		Mass: 150,25 kg	Scale: 1:10	Naming: Mount Assembly / AZ Fork / AZ Fork Structure / Cabinets Support R Structure
		Designed 08/01/2018 ACA		
		Checked 27/01/2018 ABU		
		Approved 27/01/2018 GPM		
1 First issue ACA 04.03.21		Drawing size: A2		Drawing N. 7113-110-01-00 — Sheet: 1 /1
Rev Modification Name Date				Filename: Cabinets Support R Structure.iam

VIEWS AND SECTIONS ARE TO BE WORKED WITH REFERENCE TO EUROPEAN DWG SYSTEM

ALL RIGHTS BELONG TO EIE GROUP Srl
NO COPIES, REPRODUCTION OR DISSEMINATION ARE PERMITTED.